REV.	SPECIFICATION	ECN NO.	APPD.

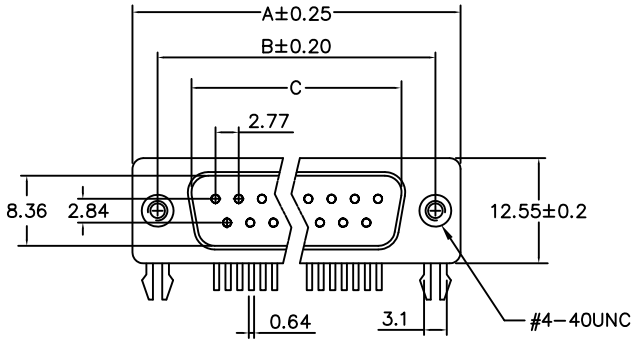

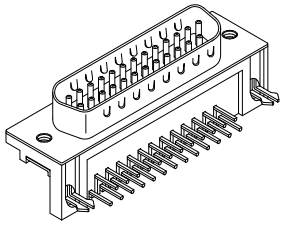

Material:

Housing: High Temperature Plastic UL94V-0.
Contacts: Copper Alloy.
Shell: Metal.

Electrical Characteristics:

Volatge Rating: AC 250V.
Current Rating: 1 AMP.
Dielectric Withstanding Voltage: AC 1000V For 1 minute.
Insulator Resistance: 1000MΩ min. at DC 500V.
Contact Resistance: 30mΩ max. at DC 100mA.
Operating Temperature: -55°C~+105°C.

***RoHS Compliant**

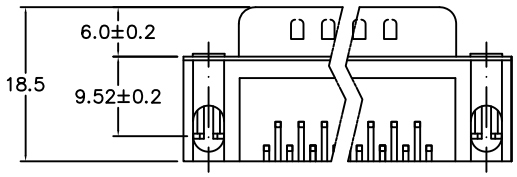

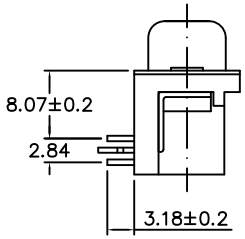

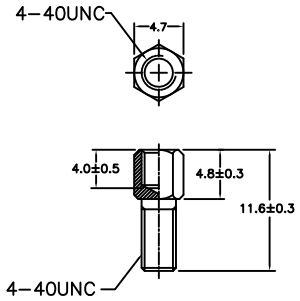

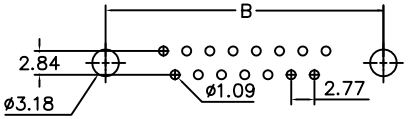

P.C. Board Layout

7906-A xx M H A -HT

- Series: 7906-A
- Position: xx
- M: Male
- H: With Grounding Forks With Riveted Threaded Inserts and with Jack Screws are Bagged Separately
- A: Tray Package
- -HT: High Temperature Plastic

Position	Dimension			
	A	B	C	D
9	30.81	24.99	16.92	16.33
15	39.14	33.32	25.25	24.66
25	53.04	47.04	38.96	38.38
37	69.32	63.50	55.42	54.84

Tolerances	Dwg. No.	7906D01022	Title: 7906 Series D-SUB Right Angle Type	OUPIIN ELECTRONIC(KUNSHAN) CO., LTD.
x = ±0.50	Projection			P/N: 7906-AxxMHA-HT
.x = ±0.25	Unit mm	Scale 1:1		SHEET 1/1 Ver.No. A4
.xx = ±0.15	Drawn By	Peggy11/30'15	①747	