REV.	SPECIFICATION	ECN NO.	APPD.
X10			

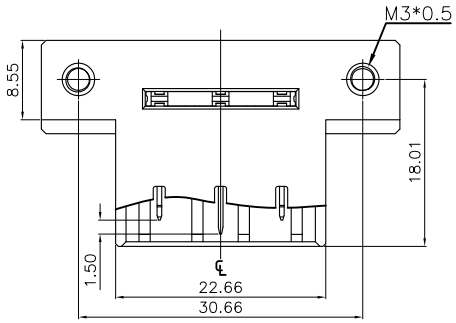

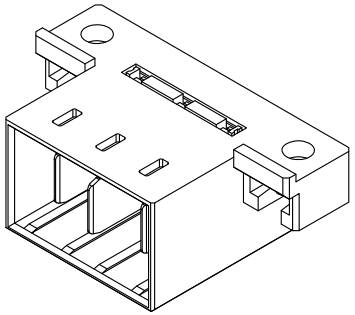

Material:
- Housing: High Temperature Plastic UL94V-0 .
- Contacts: Copper Alloy

Electrical Characteristics:
- Current Rating: Power Pin 15 AMP.
- Dielectric Withstanding Voltage: Power Pin DC 2500V For 1 minute.
- Insulator Resistance: Power Pin 20000MΩ min. at DC 500V.
- Contact Resistance: Power Pin 2.0mΩ max. at DC 20mA.
- Operating Temperature: -20°C ~+105°C .

*RoHS Compliant

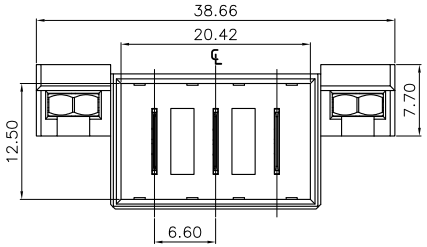

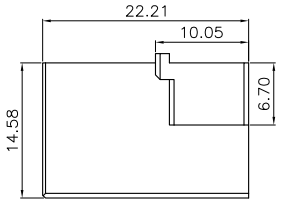

9390- 3 H 03 C 00 A

- Series
- 3: Male Straight
- H:Power Contact 6.60mm Pitch
- 03: 3of position
- C: Selective Gold Plated
- 00:G/F
- A:Tray Package

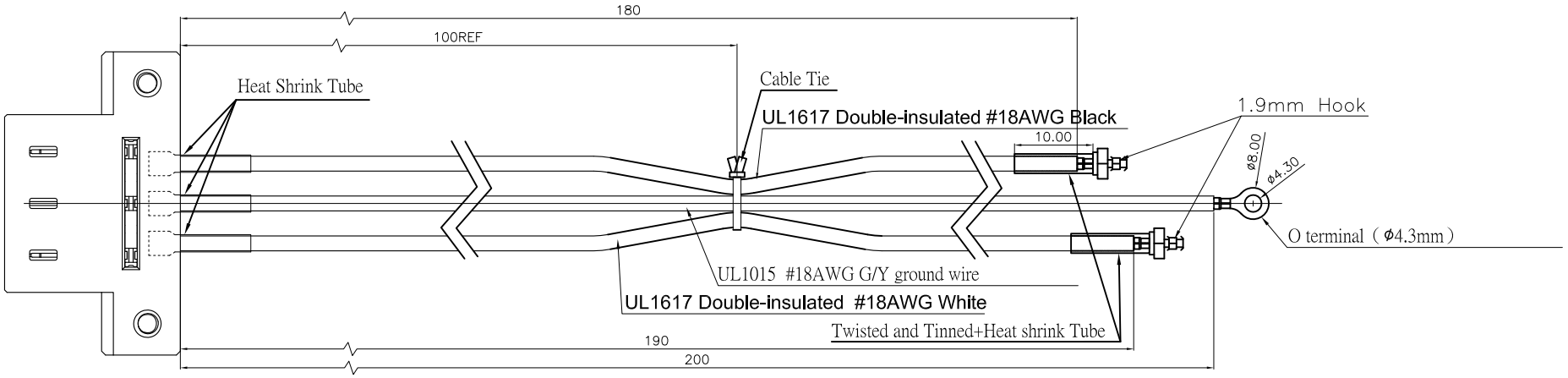

Tolerances	Dwg. No.	9390-D0000-001	Title: 9390 Series Male Straight Wire type	OUPIIN ELECTRONIC(KUNSHAN) CO., LTD.
x = ±0.5	Projection			P/N: 9390-3H03C00A
.x = ±0.25	Unit mm	Scale 1:1		SHEET 1/1 Ver. No. X10
.xx = ±0.15	Drawn By	SH 03/22'17		